ATTACHMENT III
STRINGER TO PILING ABUTMENTS

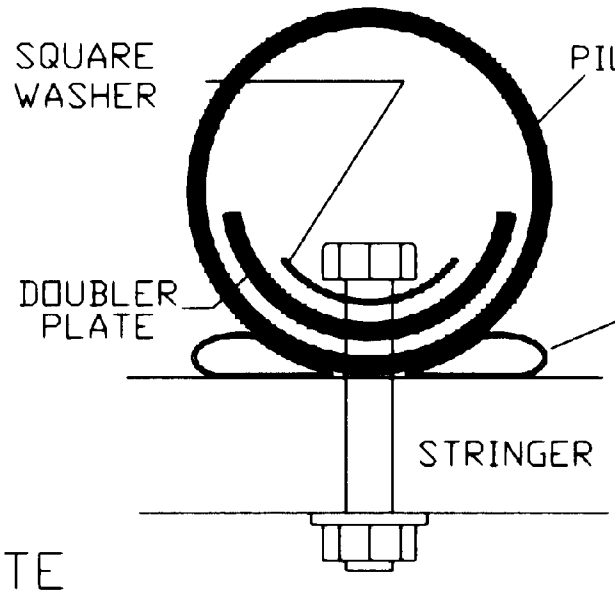

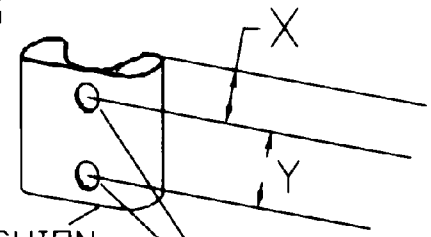

NOTE: DRILL IN FIELD - REFER TO CODE FOR SIZE AND NUMBER OF BOLTS

DOUBLER PLATE SQUARE WASHER AND BOLT FROM INSIDE

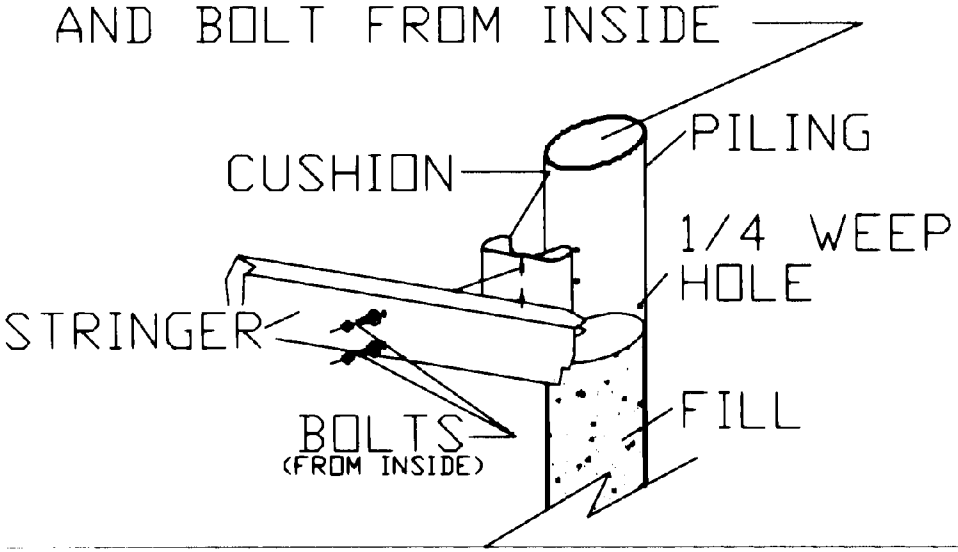

X = MIN. 1 1/4"

Y = MIN. 2 1/2"

UNLESS OTHERWISE SPECIFIED		
THIS DRAWING IS "CAD QUALIFIED"		
FINISH	TOTAL DIMENSIONAL TOL.	IMPLIED FINISH
	UP TO .0005"	63
	OVER .0005 TO .002	125
	OVER .002	250
DECIMALS: 3 PL. ±.005, 2 PL. ±.015, 1 PL. ±.06		
ANGLES ±1/2° / FRACTIONS ± 1/16"		
DEBURR & BREAK SHARP EDGES		

STRINGER TO PILING ABUTMENTS

SeaCure Docking Systems Inc.
Urbanna, Virginia

CONFIDENTIAL

NOT TO BE COPIED OR UTILIZED FOR ANY PURPOSE WITHOUT THE WRITTEN AUTHORIZATION OF SEACURE DOCKING SYSTEMS INC.

THIS DRAWING IS THE EXCLUSIVE PROPERTY OF SEACURE DOCKING SYSTEMS IT IS FURNISHED FOR REFERENCE INFORMATION ONLY.

DATE June 5, 2005 | SCALE

ECO NO.	REV NO.	DESCRIPTION

DRAWN BY PWM | CHKD BY | Nº SDI-000022