DRILL SUPPORT FOR STRINGER ATT. TOOL

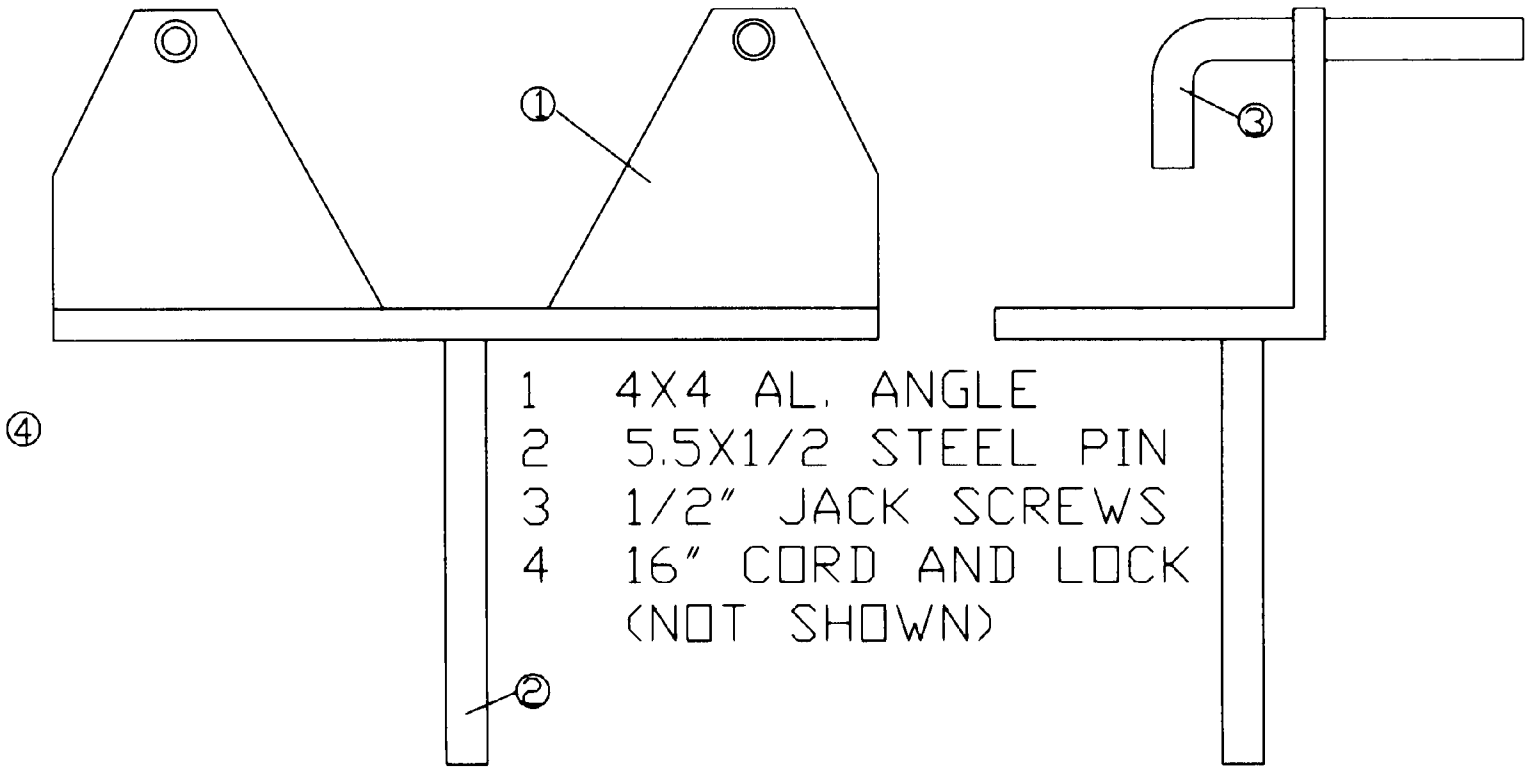

1 4X4 AL. ANGLE
2 5.5X1/2 STEEL PIN
3 1/2" JACK SCREWS
4 16" CORD AND LOCK (NOT SHOWN)

ECO NO.	REV NO.	DESCRIPTION

UNLESS OTHERWISE SPECIFIED
THIS DRAWING IS "CAD QUALIFIED"

FINISH	TOTAL DIMENSIONAL TOL.	APPLIED FINISH
	UP TO .0005"	63
	OVER .0005 TO .002	125
	OVER .002	250

DECIMALS: 3 PL. ±.005, 2 PL. ±.015, 1 PL. ±.06
ANGLES ±1/2° / FRACTIONS ± 1/16"
REMOVE & BREAK SHARP EDGES

DRILL SUPPORT FOR STRINGER ATTACHMENT TOOL

SeaCure Docking Systems Inc.
Urbanna, Virginia

CONFIDENTIAL

DATE AUGUST 8, 2005 SCALE

DRAWN BY PWH

№ SDI-0000021