STRINGER / PILING ATTACHMENT TOOL

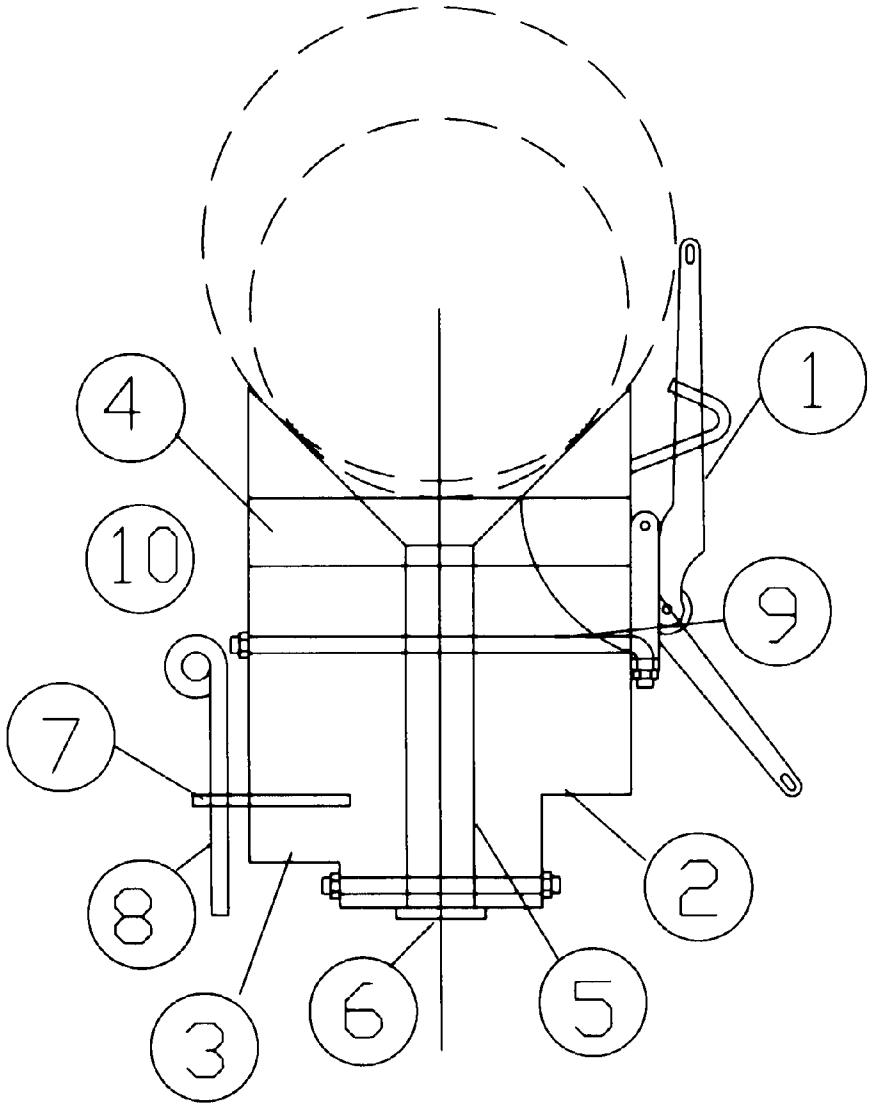

1 CAM LOCK BINDER
2 "4X4" RT SIDE RAIL
3 "4X4" LT SIDE RAIL
4 1 1/2X2 BLOCK
5 "2X6" CENTER BLOCK
6 2X6.5 AL BUTT PLATE
7 3 1/2 AL CHAIN PL
8 CHAIN ADJ W WING NUT
9 "J" BOLT
10 CHAIN (NOT SHOWN)

THIS DRAWING IS "CAD QUALIFIED"		
FINISH: TOTAL DIMENSIONAL TOL. UP TO .0005"		APPLIED FINISH 63
OVER .0005 TO .002		125
OVER .002		250
DECIMALS: 3 PL. ±.005, 2 PL. ±.015, 1 PL. ±.06		
ANGLES ±1/2° / FRACTIONS ± 1/16"		
DEBURR & BREAK SHARP EDGES		
ECO NO.	REV NO.	DESCRIPTION

STRINGER / PILING ATTACHMENT TOOL

SeaCure Docking Systems Inc.
Urbanna, Virginia

CONFIDENTIAL

DATE AUGUST 6, 2005 | SCALE

DRAWN BY PWR | CHKD BY | № SDI-0000020